WHY DOES LIGHTNING EXPLODE AND GENERATE MHD POWER?

Peter Graneau
Center for Electromagnetics Research, Northeastern University
Boston, MA 02115

Presented at *Infinite Energy* Magazine's Cold Fusion and New Energy Symposium on October 11, 1998, Manchester, NH.

Abstract

The talk given at the Manchester symposium reviewed the long history of thunder research and proposed, for the first time, that it is arc liberated chemical energy from the air which explodes the lightning channel. Regardless of the cause of thunder, the ejection of ions from the atmospheric arc through the strong encircling magnetic field should generate MHD (magneto-hydrodynamic) power. This is expected to augment the flow of discharge current in the lightning stroke. Experimental evidence provided by laboratory arcs of lightning strength supports current augmentation by MHD action.

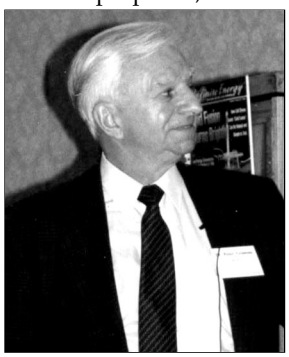

The Cause of Thunder

The best known electric arc in air is the lightning stroke. It explodes and sends a shockwave through the surrounding air, which is known as thunder. Thinking man has observed thunder and lightning for thousands of years. This spectacle plays a role in both Eastern and Western mythology. Thunder is recognized as one of the oldest riddles of recorded scientific inquiry. At the end of the twentieth century we are still questioning what makes the lightning channel explode. Remillard[1] published an excellent review of thunder research from Aristotle to 1960.

In the middle of the present century it was firmly believed, but poorly substantiated, that it was the thermal expansion of the lightning plasma which set up the shockwave in air. Then in 1961 Viemeister[2] published his findings with regard to "cold" and "hot" lightning. He wrote:

> Cold lightning is a lightning flash whose main return stroke is of intense current but of short duration. Hot lightning involves lesser currents but of longer duration. Hot lightning is apt to start fires while cold lightning generally has mechanical or explosive effects.

In the 1980s we proved at MIT[3] with photography and other means that the shockwave emanating from a short air arc of less than one centimeter length and carrying current of lightning strength, between metal electrodes, did not propagate with a spherical front, as it should have if random thermal collisions between air molecules provided the driving force. Instead the explosion was found to be a distinctly radial blast. The expanding air plasma disk, of a thickness equal to the arc length, was ablated by the environmental atmosphere and formed a supersonic edge.

By Viemeister's definition, this was a cold arc. A sheet of newsprint stretched across the arc gap was mechanically torn, but did not catch fire, so long as it did not touch the electrodes, which exhibited surface melting. No charring or any signs of heating could be detected on the paper.

If not heat, what is it that propels the radial arc explosion? The process of gas breakdown and ionization absorbs rather than liberates energy. Arc plasmas are charge neutral and have never exhibited Coulomb force implosions or explosions. Fifteen years ago we thought the forces which drove the arc ions apart had to be of electrodynamic origin, that is they had to be ponderomotive magnetic forces between current elements. Measurements[4] confirmed decisively that the explosion strength increased with arc current in conformity with an electrodynamic explanation.

Unfortunately, according to conventional electromagnetic theory, the dominant electrodynamic force on the arc should be the Lorentz pinch force. This could cause an arc implosion but it acts in the wrong direction for the observed explosion. The Newtonian electrodynamics[4] with Ampere's force law agrees with the Lorentz pinch force but, in addition, predicts strong axial pressure in the arc column. Without a containment tube, the axial pressure will break out in the radial direction. Ten years ago this appeared to be the most likely cause of thunder and air arc explosions.

Intense research of high current arcs at MIT and Northeastern University did, however, reveal that the Ampere forces were too small, by at least a factor of ten, to create the measured arc pressures.[4] This research also involved water arcs in which the explosion pressure was a hundred times that which could be justified with Ampere forces. Then it was discovered that the water arc explosions were the result of the liberation of internal chemical energy.[5] This led to a complete change of the understanding of the dynamics of pulsed arc explosions.

Liberating Chemical Bond Energy with an Electric Arc

All substances owe their existence to chemical bonding. The bonds involve largely electrical forces of attraction and repulsion. In the bonding of any two particles, the attraction must be balanced by nuclear or atomic repulsion, otherwise matter would collapse and fuse. Forces of repulsion are said to store positive potential energy, while forces of attraction store negative potential energy. If negative potential energy were to annihilate positive potential energy, there would exist no stored bond energy, no bonding, and no matter. We are driven to the conclusion that both these energies must be able to exist side by side.

What is known is how much heat it takes to break a bond. This should be—and sometimes is—described as bond dissociation energy. There is no reason to believe that bond dissociation energy must be equal to the stored bond energy. In fact, a given bond may be broken in an electric arc without heating and the dissociation energy is then likely to be very different from the thermal dissociation energy. Bond energy tables actually list thermal dissociation energies. In general, we do not know what the stored potential energies of bonding are.

Water arc experiments have shown[4,5] that a small amount of electrodynamic energy can unlock a much larger amount of stored intermolecular bond energy, which then causes an explosion. It is not unreasonable to suspect that a similar arc-triggered bond energy release is responsible for the explosion of lightning channels. That lightning and arcs in atmospheric air are responsible for chemical reactions has been known for a long time. In fact, electric arcs are used commercially to convert N_2 and O_2 molecules of air to NO, that is nitric oxide.

A considerable body of knowledge exists regarding the heat required to break up the strongly bonded N_2 molecule, but there exists no information indicating how much potential energy is stored in the molecule. When the N-N bond of the N_2 molecule is deprived of its attraction force by a small electrodynamic force, or action, in the arc, the remaining large repulsion force between the two atoms may instantly drive the atoms apart in an event which could be described as an explosion.

In view of the fact that more than two thousand years of research have not found the cause of thunder, it now looks entirely possible that this cause is the unknown amount of chemical bond energy stored in N_2 and O_2 molecules.

The Exploding Air Arc as an MHD Generator

Ordinary MHD generators, used in military and space applications, employ a rectangular plasma duct of heat resisting dielectric material. This duct is shown in Figure 1. Typically the plasma traveling at high velocity v down the duct is the flame of an oil burner. Electromagnets are usually employed to set up the magnetic flux Φ across the duct which intersects the plasma stream. The ion motion at right angles to the magnetic flux induces the electromotive force (emf) in the direction perpendicular to plasma flow and magnetic field.

As shown in Figure 1, metal electrodes are built into the duct wall so that electrons accelerated by the MHD emf can flow from the electrodes through an external load. This current i represents the electrical energy output of the MHD generator.

In the electric arc, the current creates an encircling magnetic field of considerable strength. Now consider vertical electrodes with an arc gap between them. The magnetic flux circles then lie in horizontal planes. Explosively driven ions, moving radially outward from the arc gap, cross the magnetic flux lines and induce a vertical MHD emf, or the field E_m, in the expanding plasma. Electromagnetic theories are found to demand that the induced emf acts in the direction of arc current flow, as shown by E_m in Figure 2. Hence, the electric arc has to behave like an MHD power generator.

The motionally induced emf in the direction of current flow is a forward emf associated with the conversion of mechanical energy, derived from chemical sources, to electrical energy. The reverse process of the conversion of electrical energy to mechanical energy, as in a motor, produces a back emf. For example, if an electric current is forced to flow through the electrodes of the MHD device of Figure 1 and the plasma is replaced with liquid metal, the apparatus becomes a liquid metal pump, which is the linear motion equivalent of a rotating motor. The motionally induced emf then opposes current flow and therefore is a back emf.

The back emf per unit current has the dimension of a resistance. It adds to the resistance of the current circuit through the electrodes. Similarly, a forward emf per unit current subtracts from the resistance. Hence, we may argue that in the MHD generator the current is increased by a reduction of the internal resistance of the arc plasma.

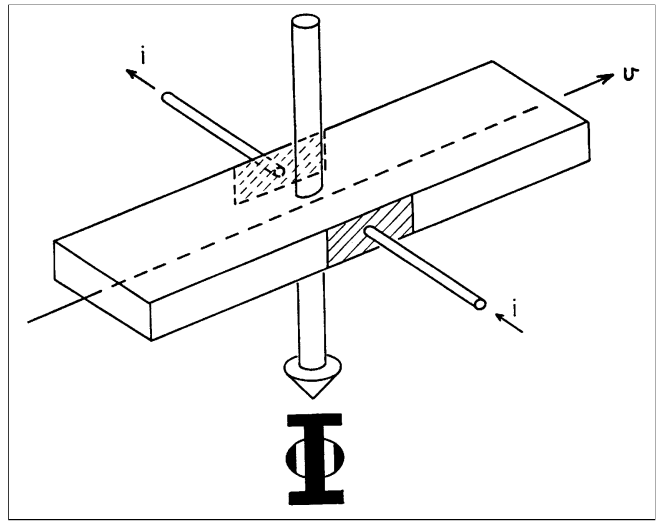

Figure 1. Conventional MHD generator.

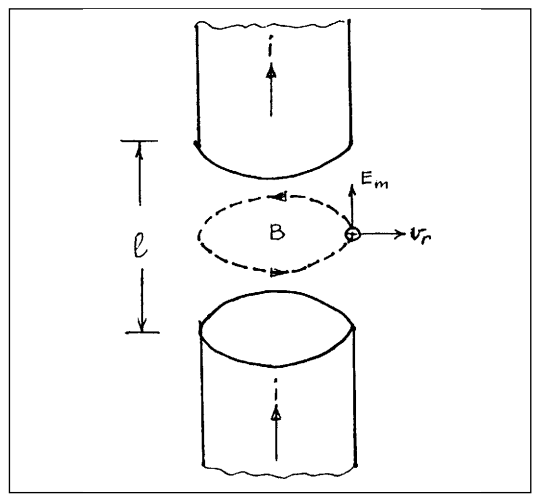

Figure 2. The arc as an MHD generator.

Experimental Indication of the Presence of MHD Energy in an Air Arc

The relevant circuit theory and diagnostics for measuring arc currents, voltages, resistances, impedances, action integrals, etc., are outlined in Reference 4. The air gap between metallic electrode rods is broken down with a capacitor bank charged to a high voltage, usually in the range 10 - 50 kV. The energy stored in the capacitors then drives an oscillating current i through the arc and discharge circuit, which may be written

$$i = I_o e^{-t/T} \sin\omega t, \qquad (1)$$

where I_o is the current intercept of the exponential envelope ($e^{-t/T}$) of the positive and negative peaks, t is time, T the decay time constant and $\omega=2\pi f$ is the ringing frequency. Figure 3 is a typical oscillogram of the decaying arc current.

The solid curve plotted on Figure 4 represents the experimental values of

$$I = I_o e^{-t/T}, \qquad (2)$$

as a function of time. Every positive and the magnitude of every negative current peak lies on this curve.

The MHD power generated has to be very dependent on the current i, which determines not only the strength of the encircling magnetic field B but also the ion velocity v_r as a result of the current-dependent strength of the chemical explosion (see Figure 2). The MHD effect will be zero at t=0 and approximately zero after

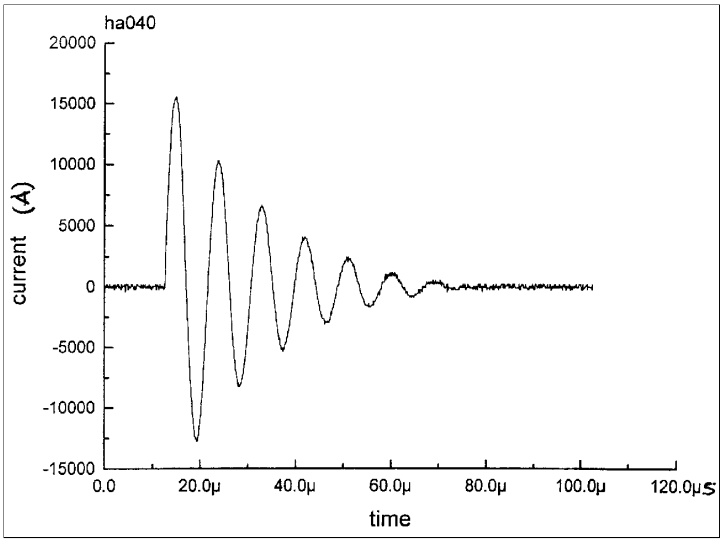

Figure 3. Discharge current oscillogram.

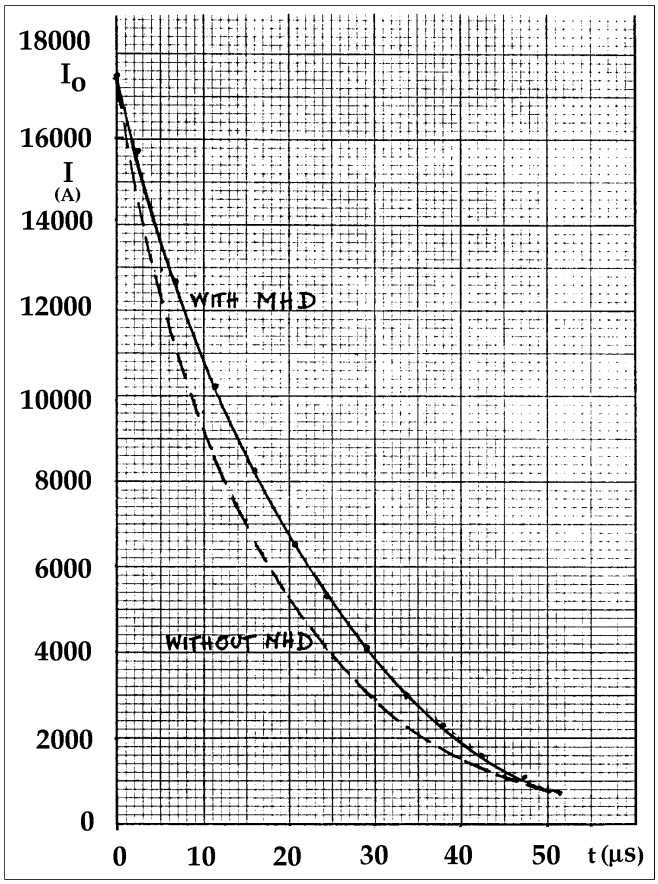

Figure 4. Plot of equation 2.

a certain time when i has fallen below some threshold value.

The solid curve of Figure 4 refers to a particular arc experiment and has been plotted for the positive and negative current peaks of Figure 3. This curve has been labeled "with MHD." From the I_o value and the tail of the curve (I<800 A) the exponential $e^{-t/T}$ can be computed from Equation 2. Using this exponential, the rest of the curve can be plotted. This is the broken curve labeled "without MHD." It is seen to fall below the experimental curve, just as expected if MHD energy is generated over the middle portion of the curve. The difference between the two curves of Figure 4 represents the MHD augmentation of the arc current.

Conclusion

The cause of thunder has eluded scientists from Aristotle on right up to the end of the twentieth century. All explanations advanced in this long search have been disproved with laboratory experiments involving atmospheric air arcs of lightning strength. Now a new explanation has been put on the table. It claims the explosion of the lightning channel is due to the impulsive liberation of chemical bond energy stored in the diatomic molecules of nitrogen and oxygen. It will take time before this suggestion is widely confirmed or rejected.

The lightning channel undoubtedly explodes and thereby shoots air ions through the magnetic field of the lightning current. This should result in the generation of MHD power and an augmentation of the arc current. It now appears that notice of this fact has escaped arc scientists. Maxwell's field theory and the Newtonian electrodynamics agree that the effect should exist, but it remains to be established if it is of significant or negligible magnitude. The first experimental findings suggest that it is significant.

References

1. W.J. Remillard, 1961. "The History of Thunder Research," *Weather,* Vol. 16, p. 245.
2. P.E. Viemeister, 1972. *The Lightning Book,* MIT Press, Cambridge Massachusetts.
3. P. Graneau, 1989. "The Cause of Thunder," *Journal of Physics D: Applied Physics,* Vol. 22, p. 1083.
4. P. Graneau and N. Graneau, 1996. *Newtonian Electrodynamics,* World Scientific, New Jersey.
5. G. Hathaway, P. Graneau and N. Graneau, 1998. "Solar Energy Liberation from Water by Electric Arcs," *Journal of Plasma Physics,* (Cambridge University), Vol. 60, p. 775.

Letters continued from page 7

might add to the subscriptions.

To my mind, at this point, it's a novel chemical battery that takes various forms . . . I do sincerely hope something useful comes out of all this work and energy from so many, much of what I attribute to your amazing fortitude dealing with all these blasphemous unbelievers.

This is a very heartening turn of events and one I hope all of the alternative science community will follow, that is, seeking a prototype that clearly demonstrates the claimed effect, followed by independent replications, inevitably followed by investors smelling a chance to make some big bucks on a relatively small investment

Jerry W. Decker
Dallas, TX

✍ ✍ ✍

To the Editor:

Thanks, very much, for your generous Fed/Ex package. Your publications are superb! I am very impressed with the way you organize and present information.

In particular, I appreciate the way you and your colleagues are focused on asking the right questions. It is, in my humble view, exactly what our present situation calls for.

I will look forward to receiving my subscription to *Infinite Energy* and will look for ways to mention your good work in future reports I hope to write.

Please do keep me informed. And thank you. You are providing a service of incalculable value.

Hal Plotkin
San Francisco, CA

✍ ✍ ✍

To the Editor:

Thank you for the complimentary copy of your magazine. For some time I have been interested in cold fusion, though I know little about it.

I will circulate the magazine at our Annual General Meeting on Friday, February 19 in Hobart. I will also seek the opinion of persons more knowledgeable than I about the concepts.

Fred Thornett, Secretary
Australian Skeptics in
Tasmania, Inc. Tasmania, Australia